90° ELBOWS – LONG RADIUS SCHEDULE 80

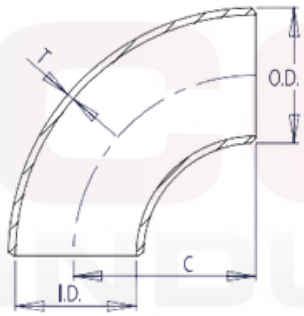

SCHEDULE 80						
Pipe Size	Outside Diameter	Inside Diameter	Wall Thickness	Center to End	Pipe Schedule Number	Approx. Weight in Pounds
	O.D.	I.D.	T	C		
1/2	0.84	0.546	0.147	1.5	80	0.26
3/4	1.05	0.742	0.154	1.5	80	0.29
1	1.32	0.962	0.179	1.5	80	0.48
1 ¼	1.66	1.278	0.191	1.88	80	0.79
1 ½	1.9	1.5	0.2	2.25	80	1.2
2	2.38	1.944	0.218	3	80	2.1
2 ½	2.88	2.328	0.276	3.75	80	3.8
3	3.5	2.9	0.3	4.5	80	6.3
3 ½	4	3.364	0.318	5.25	80	8.6
4	4.5	3.826	0.337	6	80	12.5
5	5.56	4.81	0.375	7.5	80	21.2
6	6.62	5.756	0.432	9	80	34.4
8	8.62	7.62	0.5	12	80	71.3
10	10.75	9.562	0.594	15	80	111
12	12.75	11.374	0.688	18	80	158
14	14	12.5	0.75	21	80	201
16	16	14.312	0.844	24	80	270
18	18	16.124	0.938	27	80	348
20	20	17.938	1.031	30	80	422
24	24	21.562	1.219	36	80	604